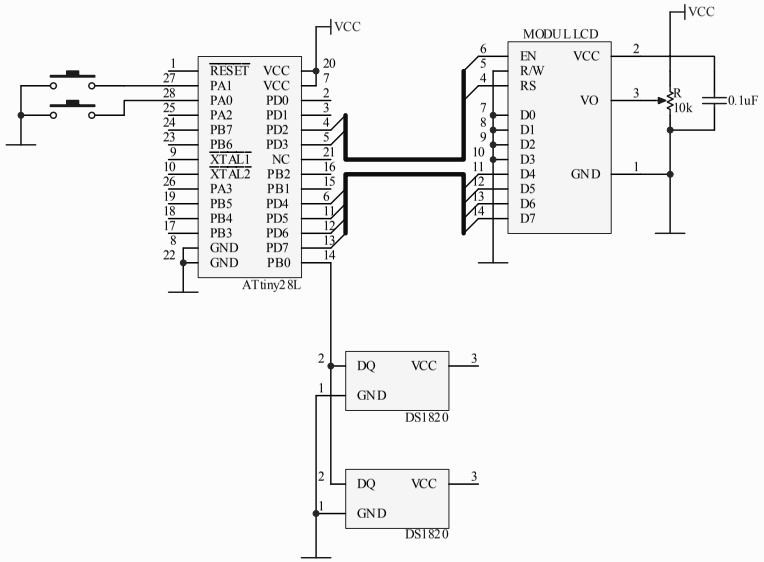

Title		
Size B	Number	Revision
Date: 23-05-04	Sheet of	
File: D:\Students\..\term-1wire ATtiny28L LCD.SCHDOC	Drawn By:	